L42N01 电源适配器 715G3351 1A HV

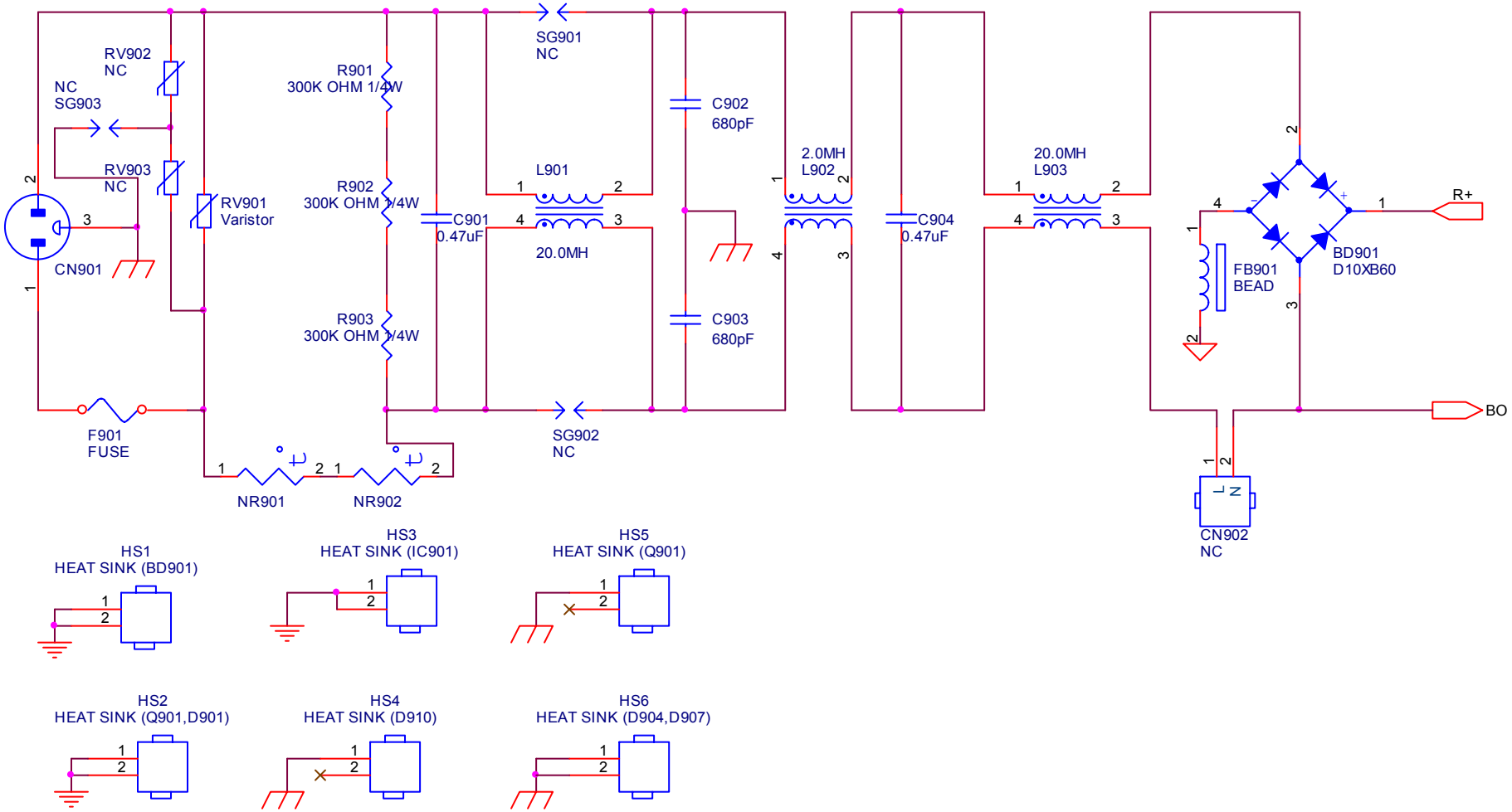

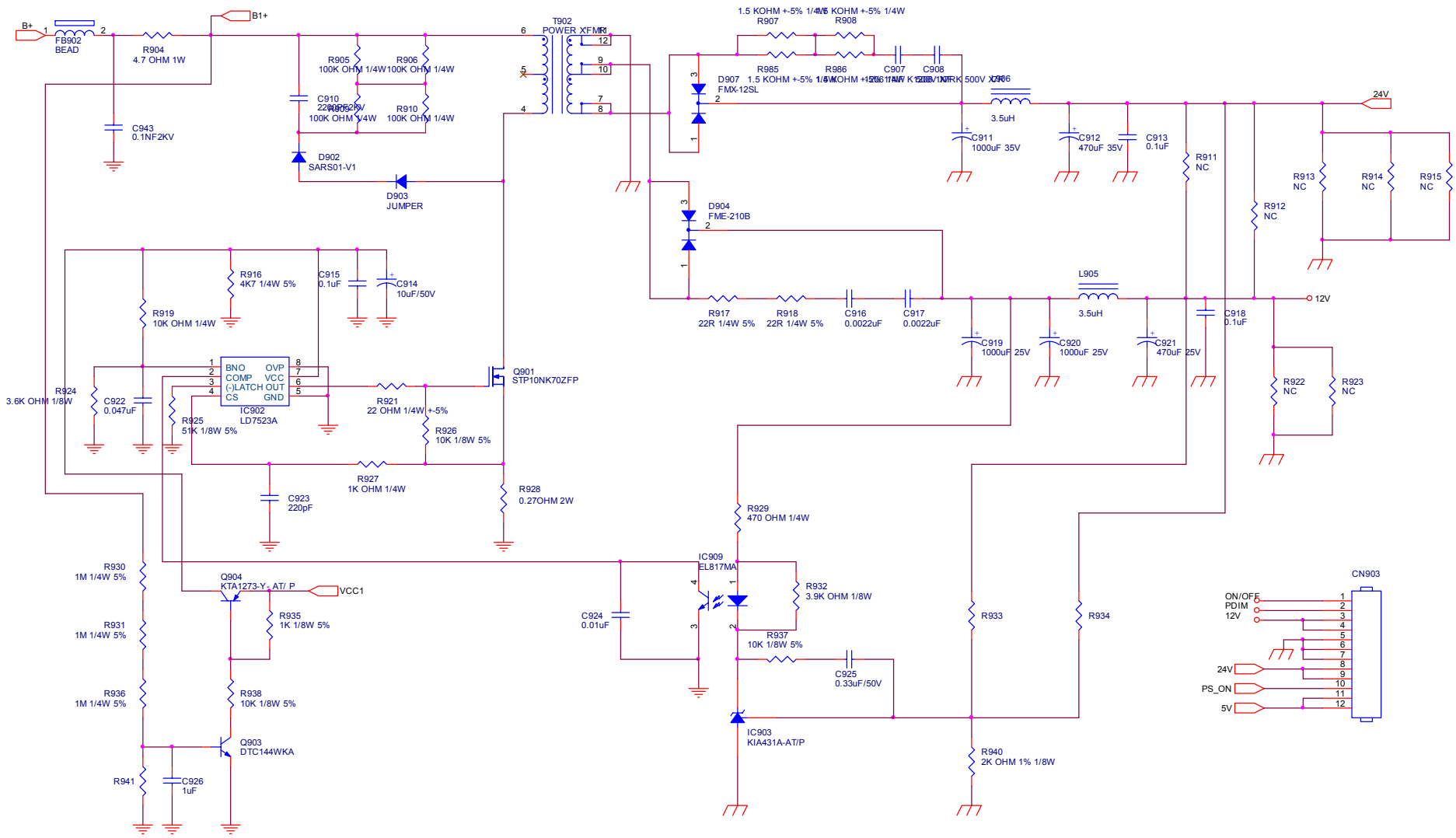
B+
FB902
BEAD
R904
4.7 OHM 1W
B1+
C943
0.1NF2KV
R905
100K OHM 1/4W
R906
100K OHM 1/4W
C910
R910
100K OHM 1/4W
D902
SARS01-V1
D903
JUMPER
T902
POWER XFMR
R907
R908
R985
R986
C907
C908
D907
FMX-12SL
L906
3.5uH
C911
1000uF 35V
C912
470uF 35V
C913
0.1uF
24V
R911
NC
R912
NC
R913
NC
R914
NC
R915
NC
D904
FME-210B
R916
4K7 1/4W 5%
C915
0.1uF
C914
10uF/50V
R919
10K OHM 1/4W
R917
22R 1/4W 5%
R918
22R 1/4W 5%
C916
0.0022uF
C917
0.0022uF
L905
3.5uH
12V
C918
0.1uF
C919
1000uF 25V
C920
1000uF 25V
C921
470uF 25V
R922
NC
R923
NC
R924
3.6K OHM 1/8W
C922
0.047uF
BNO
COMP
(-)LATCH
CS
OVP
VCC
OUT
GND
IC902
LD7523A
R925
51K 1/8W 5%
Q901
STP10NK70ZFP
R921
22 OHM 1/4W +-5%
R926
10K 1/8W 5%
R927
1K OHM 1/4W
C923
220pF
R928
0.27OHM 2W
R929
470 OHM 1/4W
IC909
EL817MA
R932
3.9K OHM 1/8W
R937
10K 1/8W 5%
C925
0.33uF/50V
C924
0.01uF
IC903
KIA431A-AT/P
R940
2K OHM 1% 1/8W
R933
R934
R930
1M 1/4W 5%
Q904
KTA1273-Y- AT/ P
VCC1
R935
1K 1/8W 5%
R931
1M 1/4W 5%
R936
1M 1/4W 5%
R938
10K 1/8W 5%
Q903
DTC144WKA
R941
C926
1uF
CN903
ON/OFF
PDIM
12V
24V
PS_ON
5V

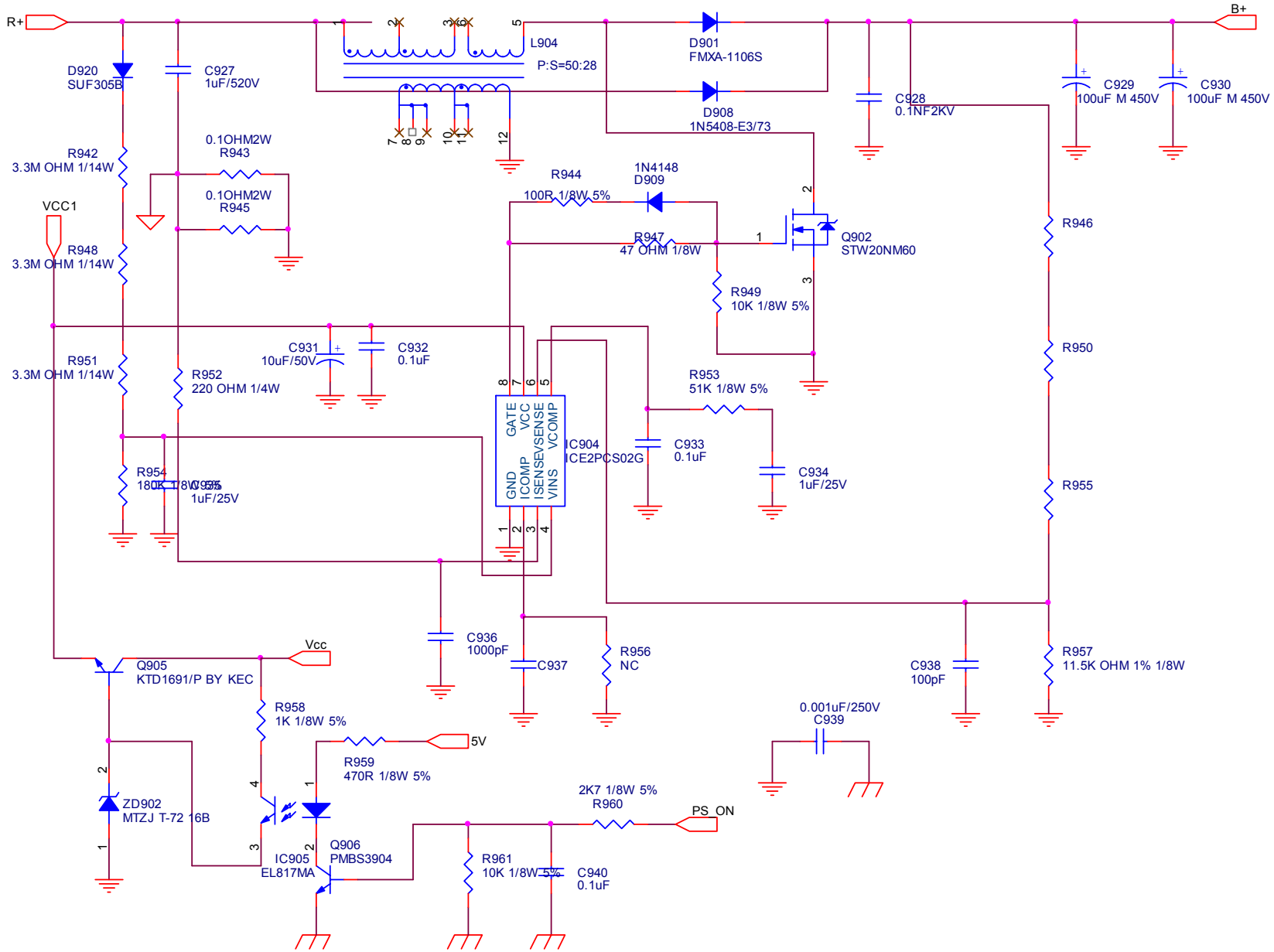
R+
B+
D920
SUF305B
C927
1uF/520V
L904
P:S=50:28
D901
FMXA-1106S
D908
1N5408-E3/73
C928
0.1NF2KV
C929
100uF M 450V
C930
100uF M 450V
R942
3.3M OHM 1/14W
0.1OHM2W
R943
0.1OHM2W
R945
VCC1
R948
3.3M OHM 1/14W
R944
100R 1/8W 5%
1N4148
D909
R947
47 OHM 1/8W
Q902
STW20NM60
R949
10K 1/8W 5%
R946
R950
R951
3.3M OHM 1/14W
R952
220 OHM 1/4W
C931
10uF/50V
C932
0.1uF
R953
51K 1/8W 5%
GATE
VCC
ISENSE/VCOMP
GND
ICOMP
VINS
IC904
ICE2PCS02G
C933
0.1uF
C934
1uF/25V
R954
180K 1/8W 5%
C935
1uF/25V
R955
C936
1000pF
C937
R956
NC
C938
100pF
R957
11.5K OHM 1% 1/8W
Vcc
Q905
KTD1691/P BY KEC
R958
1K 1/8W 5%
5V
R959
470R 1/8W 5%
0.001uF/250V
C939
ZD902
MTZJ T-72 16B
2K7 1/8W 5%
R960
PS_ON
IC905
EL817MA
Q906
PMBS3904
R961
10K 1/8W 5%
C940
0.1uF

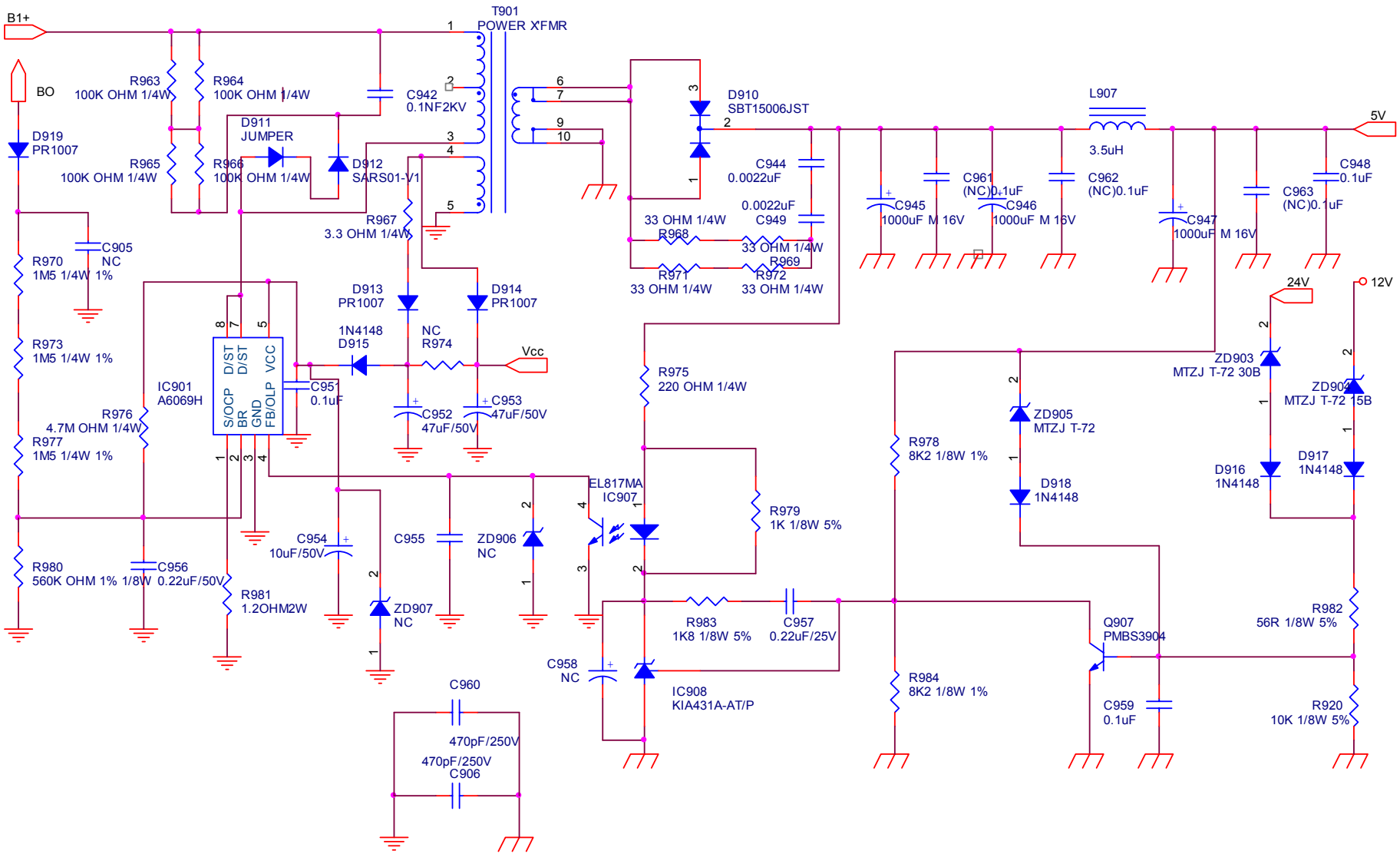
B1+
BO
T901
POWER XFMR
R963
100K OHM 1/4W
R964
100K OHM 1/4W
R965
100K OHM 1/4W
R966
100K OHM 1/4W
D911
JUMPER
D912
SARS01-V1
C942
0.1NF2KV
D919
PR1007
R967
3.3 OHM 1/4W
C905
NC
R970
1M5 1/4W 1%
R973
1M5 1/4W 1%
R976
4.7M OHM 1/4W
R977
1M5 1/4W 1%
IC901
A6069H
D/ST
D/ST
VCC
S/OCP
BR
GND
FB/OLP
D913
PR1007
D914
PR1007
1N4148
D915
NC
R974
Vcc
C951
0.1uF
C952
47uF/50V
C953
47uF/50V
D910
SBT15006JST
C944
0.0022uF
0.0022uF
C949
33 OHM 1/4W
R968
33 OHM 1/4W
R969
R971
33 OHM 1/4W
R972
33 OHM 1/4W
L907
3.5uH
5V
C945
1000uF M 16V
C961
(NC)0.1uF
C946
1000uF M 16V
C962
(NC)0.1uF
C947
1000uF M 16V
C963
(NC)0.1uF
C948
0.1uF
24V
12V
ZD903
MTZJ T-72 30B
ZD902
MTZJ T-72 15B
D916
1N4148
D917
1N4148
R975
220 OHM 1/4W
EL817MA
IC907
R979
1K 1/8W 5%
R978
8K2 1/8W 1%
ZD905
MTZJ T-72
D918
1N4148
C954
10uF/50V
C955
ZD906
NC
R980
560K OHM 1% 1/8W
C956
0.22uF/50V
R981
1.2OHM2W
ZD907
NC
R983
1K8 1/8W 5%
C957
0.22uF/25V
Q907
PMBS3904
R982
56R 1/8W 5%
C958
NC
IC908
KIA431A-AT/P
R984
8K2 1/8W 1%
C959
0.1uF
R920
10K 1/8W 5%
C960
470pF/250V
470pF/250V
C906